# MODEL SPECIFICATION
# ORBITAL GATEWAY™ - SOCKETED

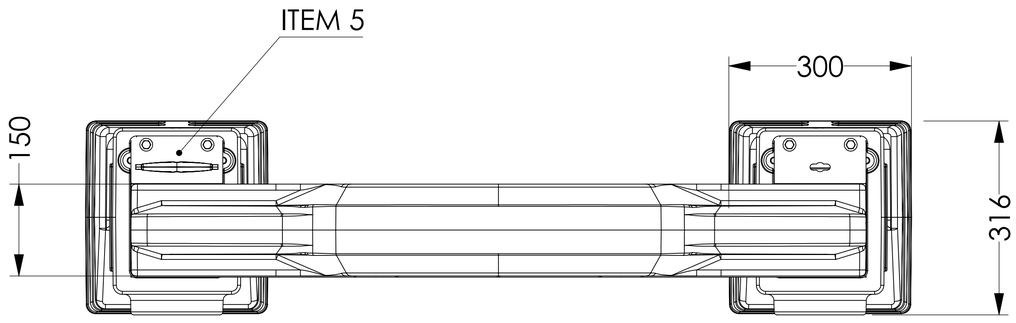


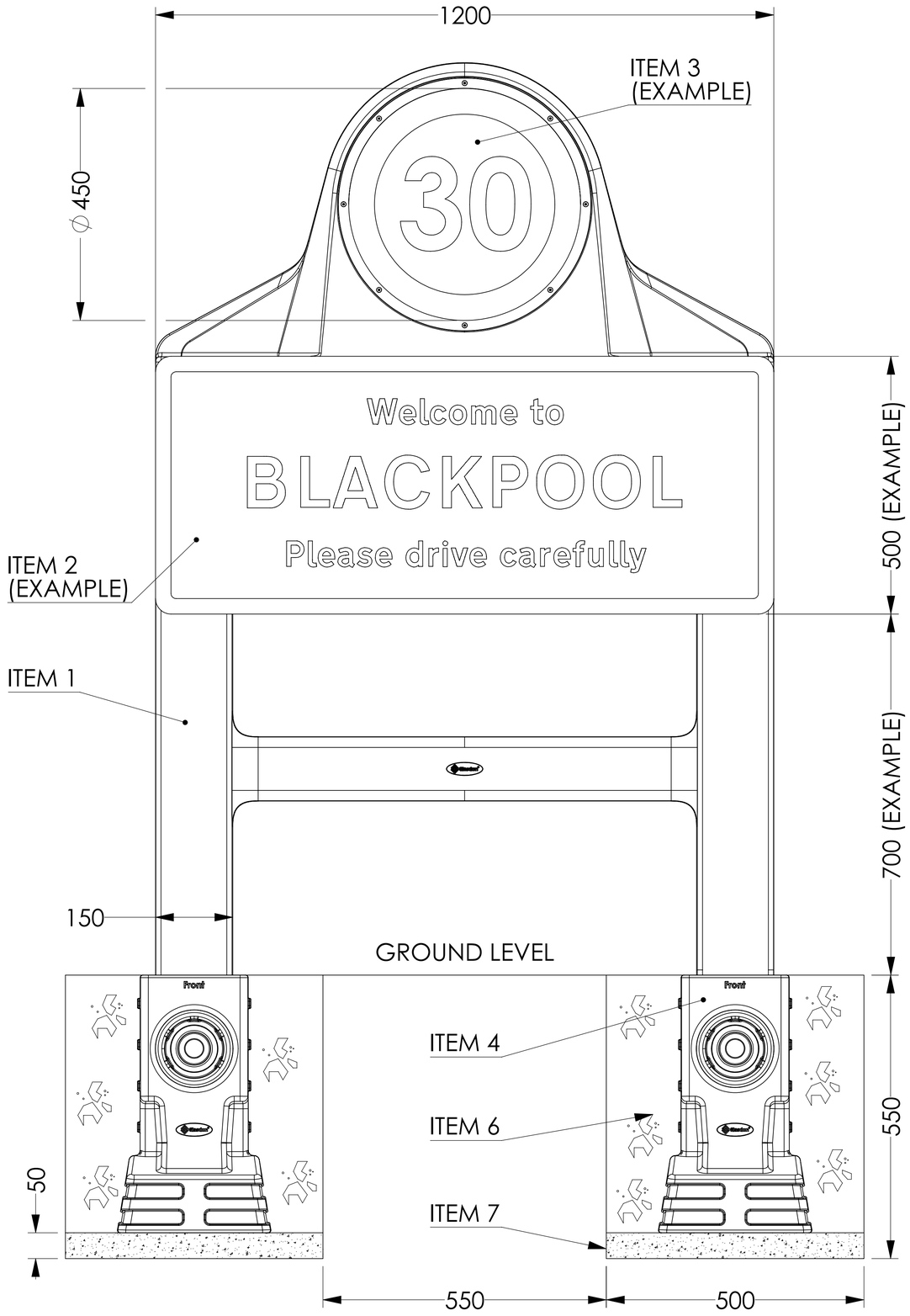


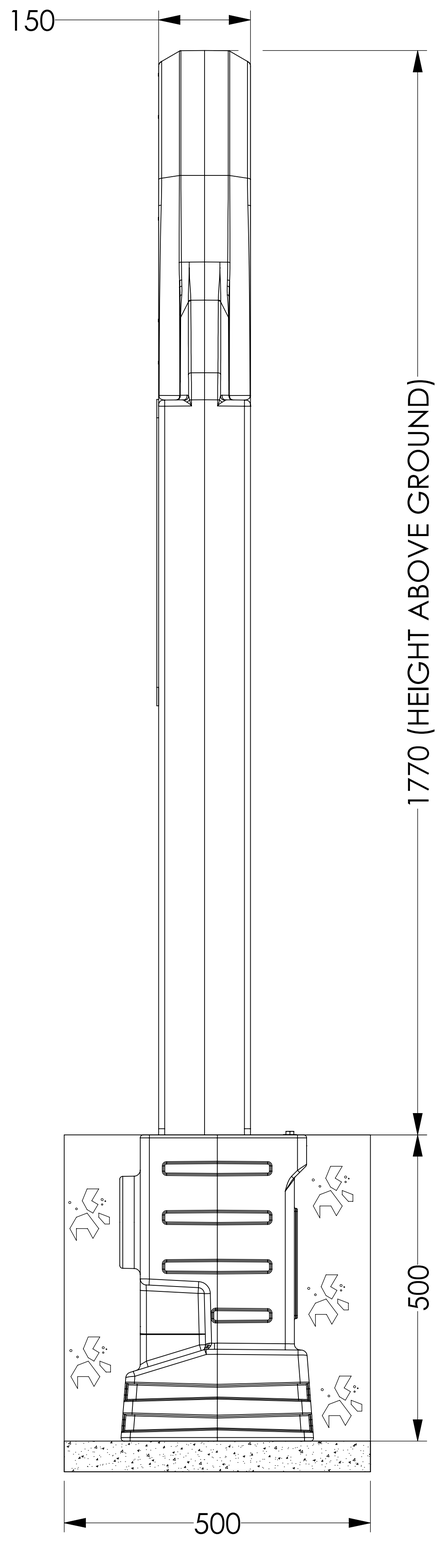


## PRODUCT INFORMATION:

- **DESCRIPTION**

ALL-IN-ONE GATEWAY SIGN CARRIER WITH REF 670 SPEED LIMIT SIGN.

- **MATERIAL**

| | |
|---|---|
| SIGN CARRIER : | DURAPOL™ |
| SOCKET : | DURAPOL™ |
| SOCKET WEDGE : | GALVANISED STEEL |
| SIGNBOARD : | DIBOND |
| Ø490mm SIGN BOARD : | PETG |
| Ø450mm SIGN FACE :<br>(E.g. REF 670 SPEED LIMIT) | AVERY DENNISON T6530T WHITE<br>PRISMATIC TRANSLUCENT |

- **DIMENSIONS**

ALL DIMENSIONS IN mm UNLESS OTHERWISE STATED

- **WEIGHTS**

**DURAPOL™ SIGN CARRIER C/W:**

| | |
|---|---|
| 500 x 1200 'WELCOME TO' & REF 670 SPEED LIMIT : | 26.5kg |
| **ORBITAL LOCKFAST SOCKET (EACH):** | 6.5kg |

- **MODEL OPTIONS**

- "WELCOME TO" SIGN WITH Ø450mm SPEED LIMIT SIGN
- "WELCOME TO" SIGN WITH PERSONALISED Ø450mm GRAPHICS

- **COLOURS**

- SIGN CARRIER - BLACK OR WHITE
- SOCKET - BLACK

## INSTALLATION INSTRUCTIONS

- ITEM 1 - SIGN CARRIER
- ITEM 2 - DIBOND SIGN BOARD
- ITEM 3 - ∅450mm SIGN (E.g. REF 670 SPEED LIMIT)
- ITEM 4 - ORBITAL LOCKFAST SOCKET
- ITEM 5 - SOCKET WEDGE
- ITEM 6 - QUICK SETTING CONCRETE (E.g. GRADE QC10)
- ITEM 7 - GRAVEL

- AVOID CONTACT WITH HOT TARMACADAM AS THIS WILL SERIOUSLY IMPAIR THE PERFORMANCE OF THE PRODUCT.

- WE HIGHLY RECOMMEND INSTALLING WITH QUICK SETTING CONCRETE (e.g. GRADE QC10) BUT EXACT INSTALLATION REQUIREMENTS SHOULD BE ASSESSED FROM A SITE SURVEY.

- 2 HOLES APPROXIMATELY THE CORRECT DEPTH AND WIDTH APART SHOULD BE EXCAVATED TO THE SPECIFICATION SHOWN ON THE LEFT.

- FIT **ITEM 2** TO **ITEM 1** WITH THE FIXINGS SUPPLIED. INSTALL INTO **ITEM 4** (2 OFF) AND USE **ITEM 5** (2 OFF) TO LOCK.

- THE PRODUCT SHOULD BE INSERTED INTO EXCAVATED AREAS ENSURING IT IS AT THE CORRECT DEPTH. (GRAVEL CAN BE PLACED UNDER THE PRODUCT TO RAISE IT TO THE CORRECT LEVEL.)

- THE HOLES SHOULD THEN BE BACK FILLED WITH QUICK SETTING CONCRETE, ENSURING THAT THE PRODUCT REMAINS VERTICAL AND LEVEL.

- IF USING AN ILLUMINATED SIGN FACE, CABLE DUCTING CAN BE FIXED TO THE FRONT OF THE SOCKET TO CONNECT A POWER CABLE TO THE PRODUCT.

## RECTANGULAR SIGN BOARD OPTIONS

**'WELCOME TO' SIGN**
**(DESIGN BESPOKE TO EACH PURCHASE ORDER)**

## Ø450mm SIGN BOARD OPTIONS (INTERNAL ILLUMINATION AVAILABLE)

**REF 670 20mph SPEED LIMIT**

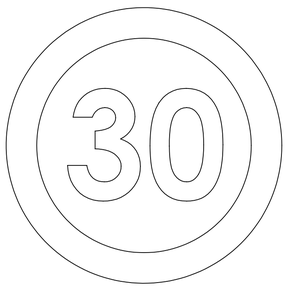


**REF 670 30mph SPEED LIMIT**

**PERSONALISATION OPTIONS AVAILABLE**


Glasdon
Glasdon group Ltd.

Website: www.glasdon.com
Email: sales@glasdon.com
Telephone: 01253 600 400
Facsimile: 01253 732558



Copyright of this dwg. is reserved by Glasdon Group. The issue of this dwg. is a confidential disclosure of its contents, and is made on condition that it is neither disclosed to a third party, nor any item described herein and designed by Glasdon Group, is produced either in whole or in part without the prior written consent of Glasdon Group.


| | |
|---|---|
| SPECIFICATION NUMBER - 02S093-S23 | ISSUE 01 |
| GLASDON GROUP LTD 02.09.22 | SHEET SIZE : A0 |